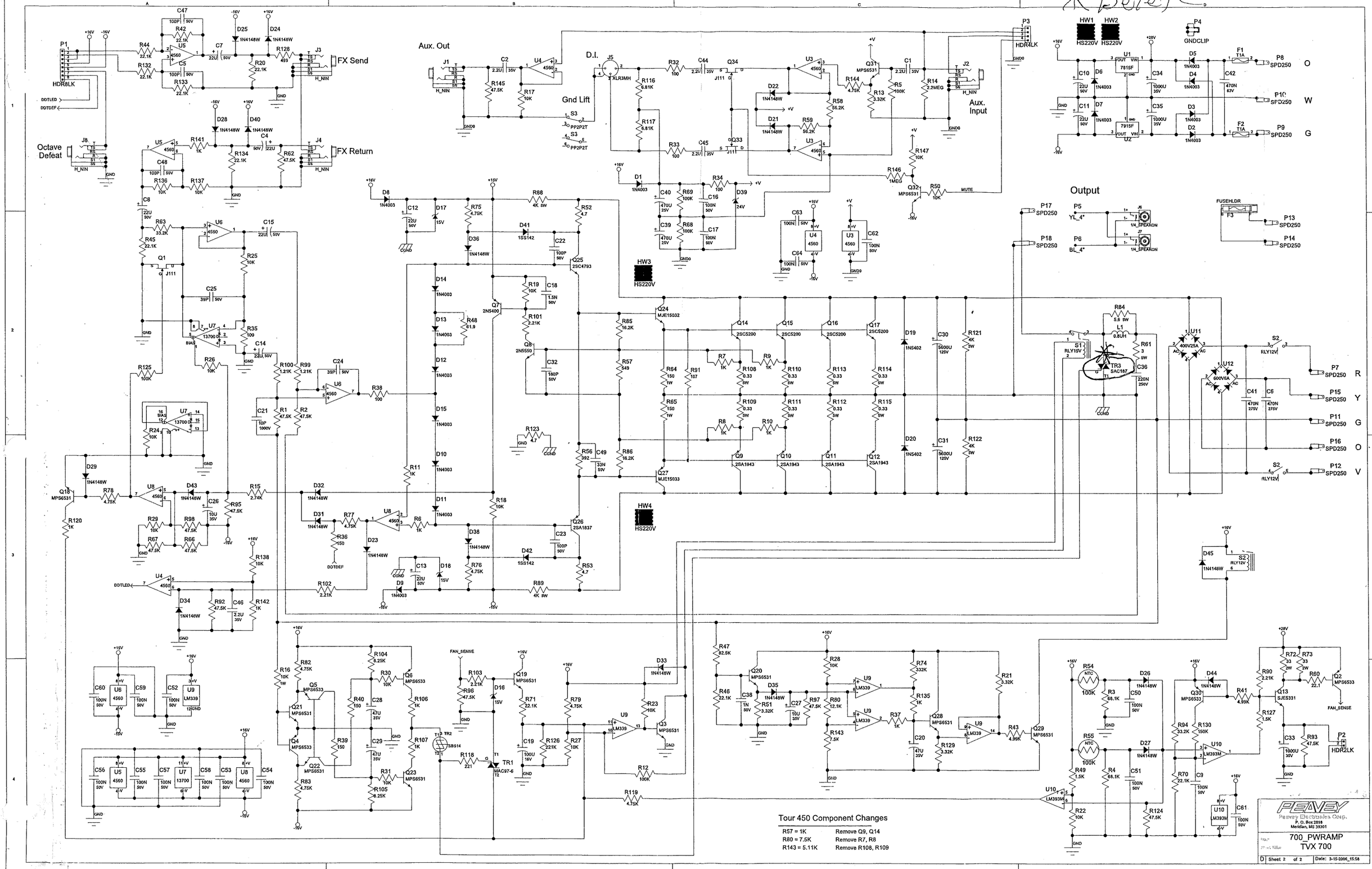

Tour 450 Component Changes

R57 = 1K	Remove Q9, Q14
R80 = 7.5K	Remove R7, R8
R143 = 5.11K	Remove R108, R109

REV	Eng	Date:	Revisio .cription	ECN#
A				
B				
C				
D				
E				
F				

INDEX

SHEET	DESCRIPTION
1	Power/Decoupling
2	Preamp
3	Octave Divider

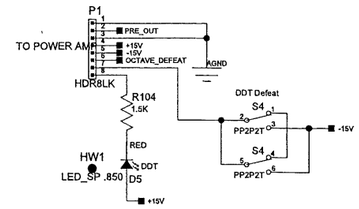

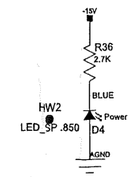

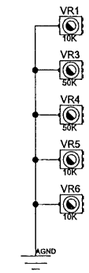

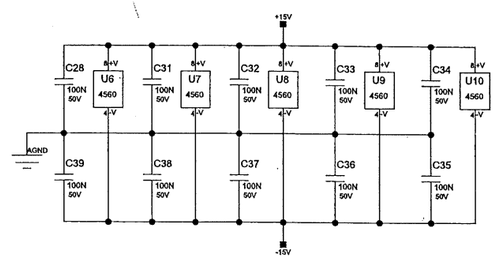

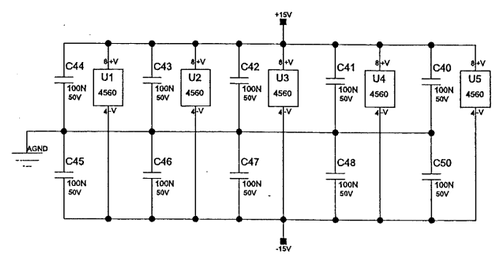

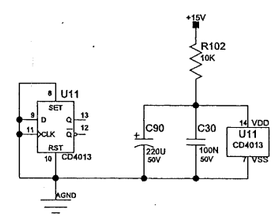

Note: All thru hole Resistors are 1/4 Watt unless otherwise indicated.
All SMT 1206 Resistors are 1/4 Watt.
All SMT 0805 Resistors are 1/10 Watt.
Note Capacitor Values are indicated as Follows:
val P = pF (picoFarads) val * 10 exp-12
val N = nF (nanoFarads) val * 10 exp-9 (1N=1000pF, 100N=0.1uF)
val U = uF (microFarads) val * 10 exp-6

Patents:

Copyright Peavey Electronics Corporation 2005.

Company Proprietary Information

Peavey Electronics Corp.
P. O. Box 2898
Meridian, MS 39301

Product:	TOUR
Title:	Power/Decoupling
Project Number:	
Eng: RBB	Release Date:
D Sheet 1 of 3	Saved: 7-14-2006_14:32

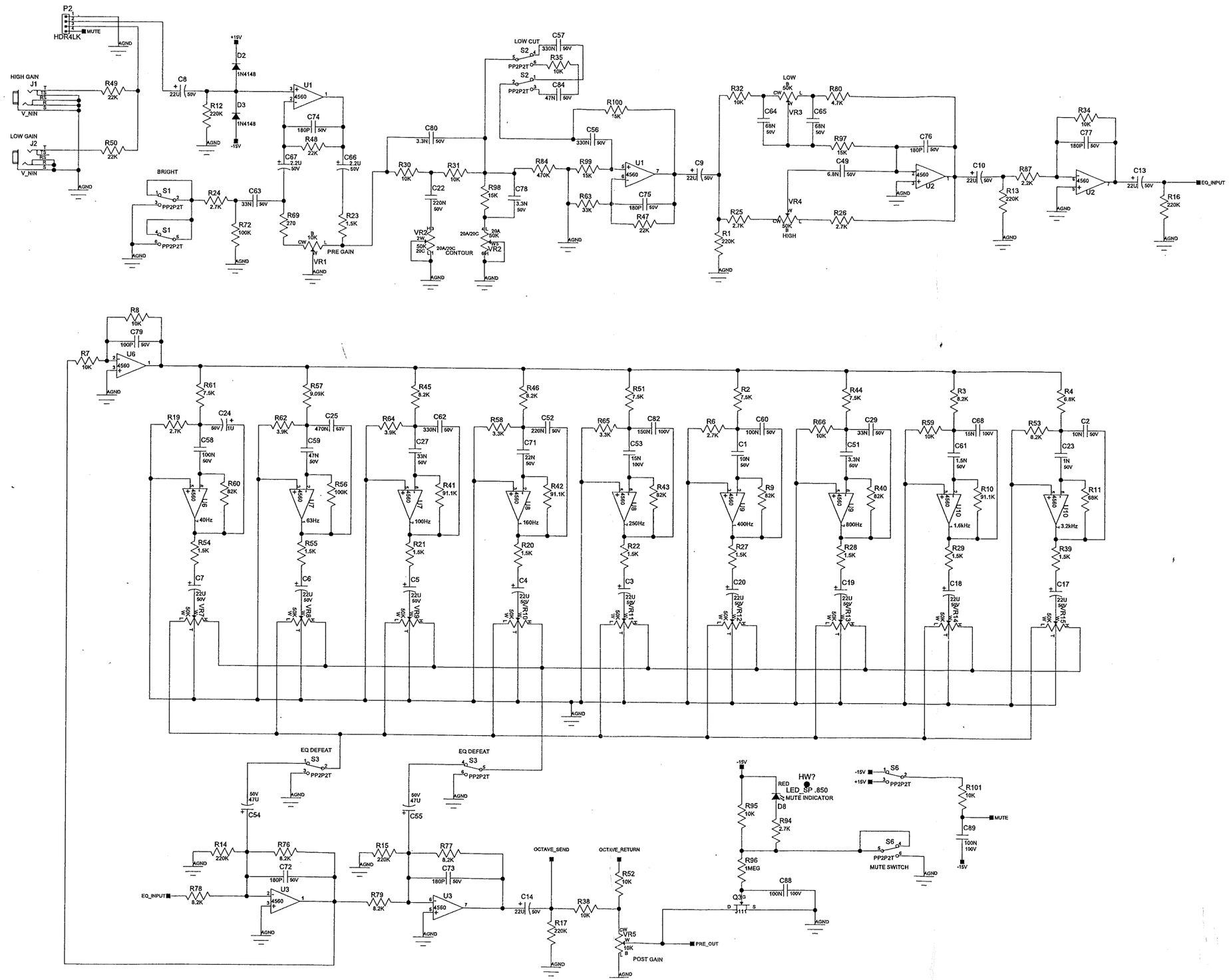

PEAVEY
Peavey Electronics Corp.
P. O. Box 2898
Meridian, MS 39301

Title: DSHEET
Drawn Title: Preamp
Designed by: Robert B. Baldwin
D | Sheet 2 of 3 | Date: 6-6-2006_8:52

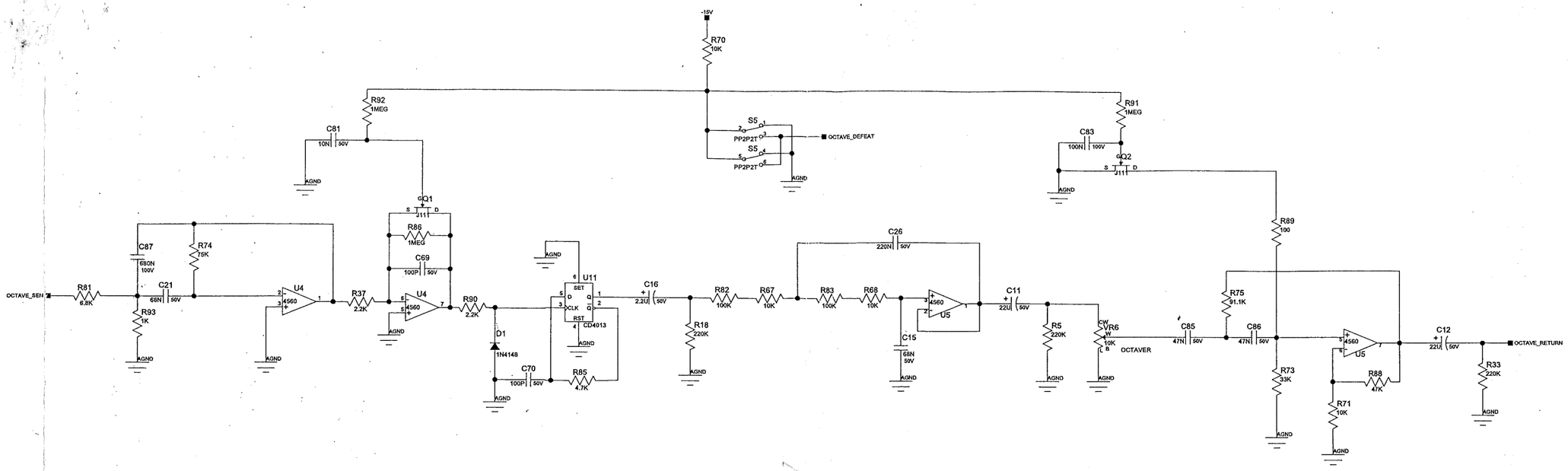

10A S.B. main fuse

TOUR 200 No Pictorial

PEAVEY
Peavey Electronics Corp.
P. O. Box 2898
Meridian, MS 39301

Title: TOUR
Sheet Title: OCTAVE DIVIDER
Designed by: Robert B. Baldwin
D | Sheet 3 of 3 | Date: 3-10-2006_9:54