GA-55RVT

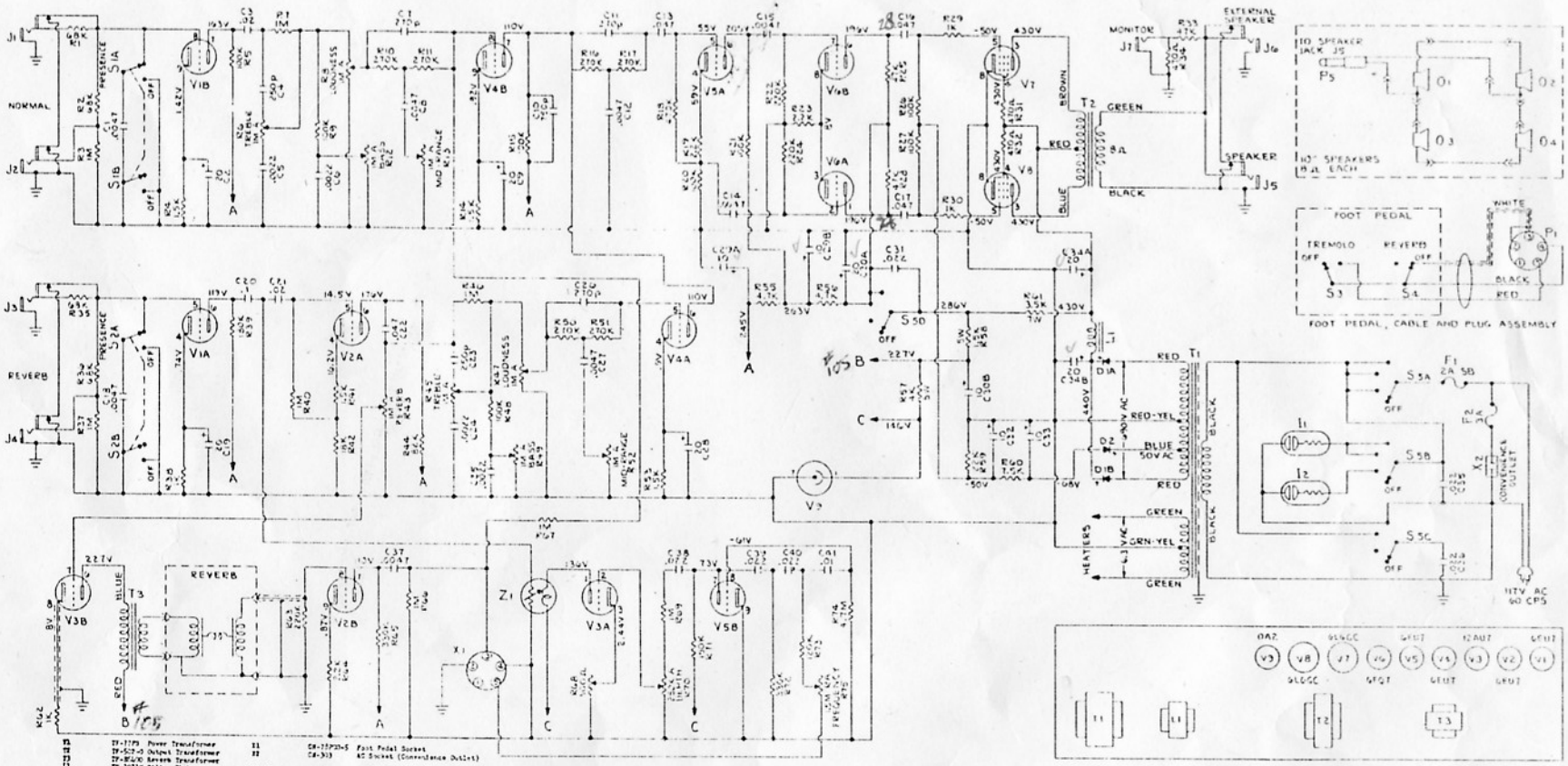


| | | | |
|---|---|---|---|
| T1 | TF-77F3 Power Transformer | Z1 | CN-77PP3-5 Foot Pedal Socket |
| T2 | TF-502-0 Output Transformer | X2 | CN-303 AC Socket (Convenience Outlet) |
| T3 | TF-8L400 Reverb Transformer | | |
| L1 | TF-3021M Filter Choke | D1A,B | DI-57 Diode - 1200 PIV, 250 MA |
| | | D2 | DI-405 Diode - 200 PIV, 1 Amp |
| S1A,B | | | |
| S2A,B | SW-129 DPST Slide Switches | R70 | CRA-4005 Control - 250K Audio (Depth) |
| S3, S4 | SW-82503 DPST Switches | R6,R8,R12,R13, | |
| S5A,B,C,D | SW-75A-1 A.C. Switch | R43,R45,R47,R49,R52 | CRA-511-3739-1 Control - 1 meg Audio (Treble, Reverb, Mid-Range, Bass, Loudness) |
| I1 | PL-37A Pilot Light (Amber) | R75 | CRA-511-3712-1 Control - 1.5 meg, 3A (Freq.) |
| I2 | PL-37B Pilot Light (Red) | R68 | CN-233/1 Control - 500 ohm WW |
| Z1 | LDR-500 Light Dependent Resistor | G1,G2,G3,G4 | S-20014 10" 8 ohm Speakers |

Recap 4FB2A1B