Notes:

Reverse Engineereed from Unit Dated 200908

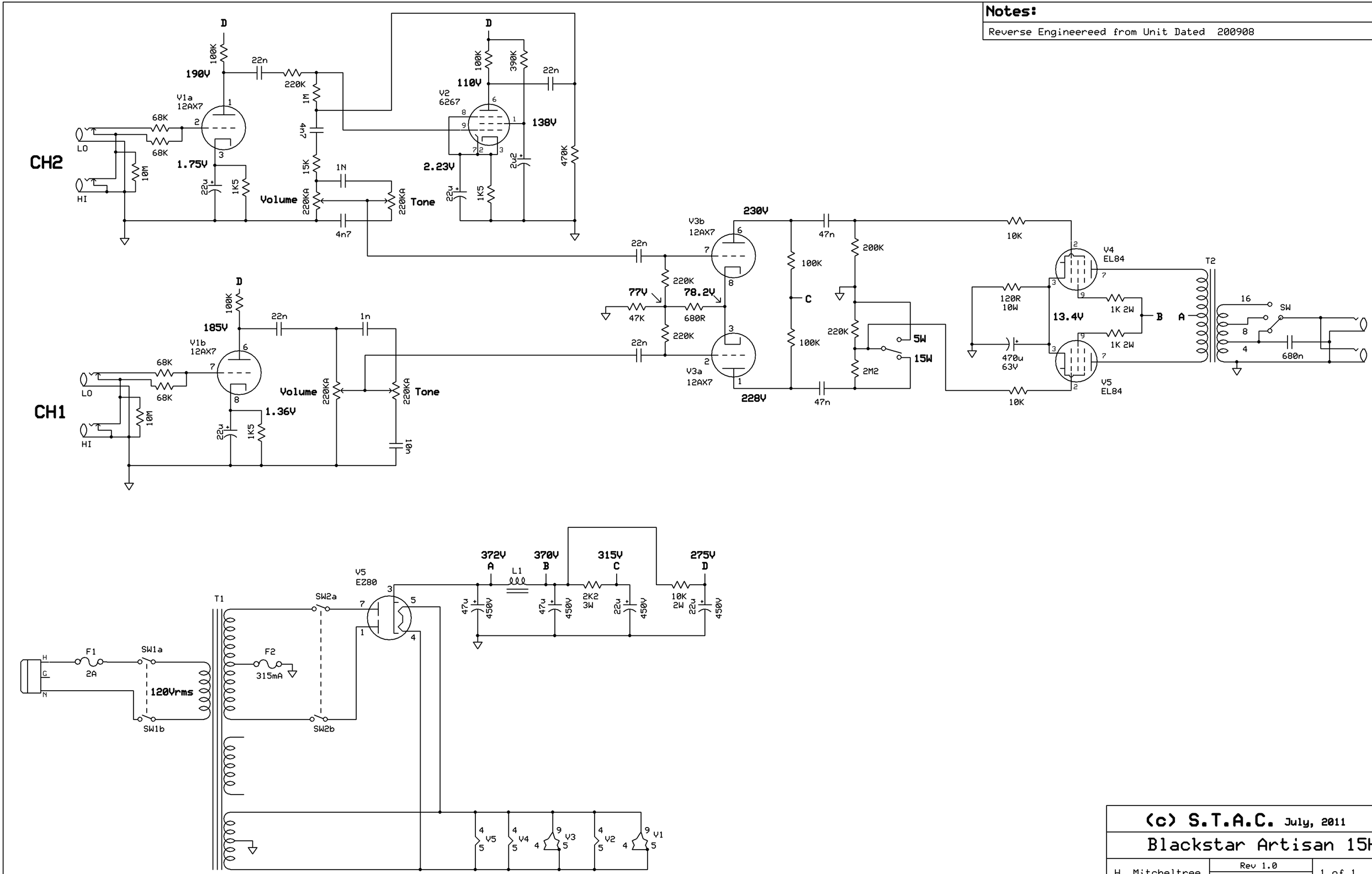

(c) S.T.A.C. July, 2011

Blackstar Artisan 15H

H. Mitcheltree	Rev 1.0	1 of 1
	7/24/2011	